ADVANCED AND EVER ADVANCING MITSUBISHI ELECTRIC

MITSUBISHI
PROGRAMMABLE CONTROLLERS
MELSEC·F

FX-1HC
SPECIAL FUNCTION BLOCK
USER'S GUIDE

JY992D53001A

This manual contains text, diagrams and explanations which will guide the reader in the correct installation and operation of the FX-1HC special function block and should be read and understood before attempting to install or use the unit.
Further information can be found in the FX PROGRAMMING MANUAL and FX SERIES HARDWARE MANUAL.

1 INTRODUCTION

- The FX-1HC hardware high-speed counter block is 2-phase 50 kHz high-speed counter. It is a special function block for the FX, FX2C series PC. The FX-1HC counts at a higher speed than the built-in high-speed counter of the PC (2-phase 2 kHz, 1-phase 10 kHz) and performs comparisons and outputs directly.
- Various counter modes, such as 1-phase or 2-phase, 16-bit or 32-bit modes, can be selected using commands from the PC. Allow the FX-1HC unit to run only after setting these mode parameters.
- The source of your input signal should be a 1 or 2 phase encoder. A 5V, 12V, or 24V power source can be used. An initial value setting command input (PRESET) and a count prohibit command input (DISABLE) are also available.
- The FX-1HC has two output. When the counter value coincides with an output compare value, the appropriate output is set ON. A PNP and an NPN output transistor is provided for both outputs to allow either sink or source connection methods.
- FX PCs versions 2.0 or later (those with serial number 13XXXX or larger) are required as these units have the TO/FROM applied instructions in their instruction set. Data transfer between the FX-1HC and the FX PC is by buffer memory exchange. There are 32 buffer memories (each of 16 bits) in the FX-1HC.
- The FX-1HC occupies 8 points of I/O on the FX or FX2C expansion bus. The 8 points can be allocated from either inputs or outputs.

1.1 External dimensions

weight : Approx 0.5 kg (1.1 lbs) Dimensions : mm (inches)
Accessories : Self-adhesive labels special block number identification.

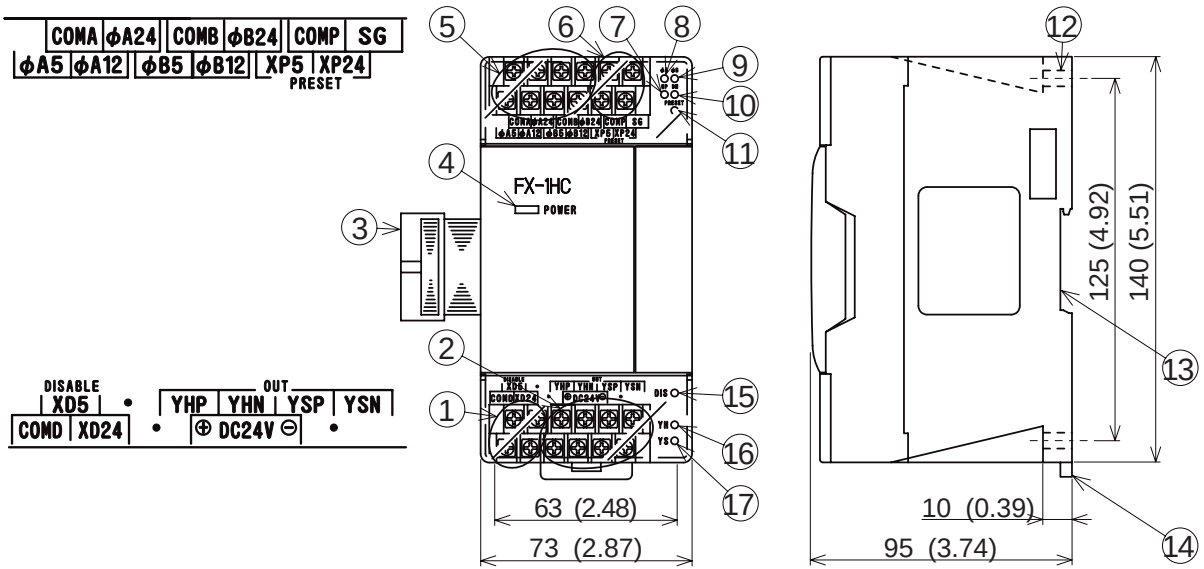

① DISABLE terminal (M3.5 (0.14) screws)
② YH•YS terminal (M3.5 (0.14) screws)
③ Extension cable and connector
④ POWER LED
⑤ ϕA,ϕB terminal (M3.5 (0.14) screws)
⑥ PRESET terminal (M3.5 (0.14) screws)
⑦ UP LED
⑧ ϕA LED
⑨ ϕB LED
⑩ DN (Down) LED
⑪ PRESET LED
⑫ Mounting hole 2- ϕ5.5 (0.22)
⑬ Attachment groove for 3.5 (1.38) wide DIN rail
⑭ DIN rail clip
⑮ DIS (DISABLE) LED
⑯ YH LED
⑰ YS LED

2 Wiring

NPN output encoders can also be used.

Encoder

Phase A

Phase B

Phase Z

OUT
COM
E

ϕA

ϕB

PRESET

Shielding wire

+24V

COM

DISABLE

START

ϕA24
ϕA12
ϕA5
COMA
ϕB24
ϕB12
ϕB5
COMB
XP24
XP5
COMP
XD24
XD5
COMD
SG

3.3k
1.5k
0.5k
0.1k

12 to 24V inputtable

DC24V+
YHP
YHN
DC24-
YSP
YSN

*1

*2

Class 3 grounding (<100 Ω)

PC

Extension cable

FX-1HC

*1. Do not connect YHP and YHN, or YSP and YSN together.
*2. Connect SG and the grounded terminal at the PC side as required.

+24V
0V

External power source DC5V, 12V, 24V

External power source DC12 to 24V

⟨Using the solderless termination⟩

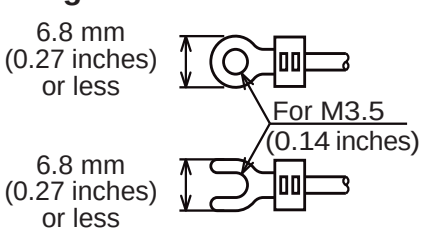

- Use crimp terminals of the dimensions specified in the left figure.
- Secure the terminals using a tightening torque of 0.5 to 0.8 N•m (5 to 8 kg•cm).
- Wire only to the module terminals discussed in this manual. Leave all thers vacant.

3 SPECIFICATIONS

3.1 Environmental specifications

The environmental specifications for the FX-1HC are the same as those for your FX series PC.

3.2 Performance specifications

Item		1-phase input		2-phase input		
		1 input	2 inputs	1 edge count	2 edge count	4 edge count
Input signal	Signal level	5V, 12V, or 24V ±10% (selected by terminal connection) 7mA				
	MAX. frequency	50 kHz			25 kHz	12.5 kHz
	Pulse shape	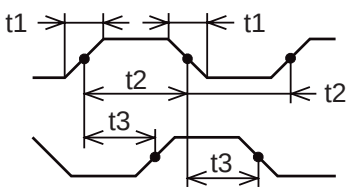 t1 : Rise/fall time is 3µs or less t2 : ON/OFF pulse duration 10µs or more t3 : Phase difference between phase A and phase B is 3.5µs or more PRESET (Z phase) input 100µs or more DISABLE (count prohibit) input 100µs or more				

Counting specifi-cation	Format	Automatic UP/DOWN (however, when on 1 phase 1 input mode, UP/DOWN is determined by a PC command or an input terminal.)
	Range	When 32-bit is specified: -2,147,483,648 to +2,147,483,647 When 16-bit is specified: 0 to 65,535 (upper limit can be user specified)
	Comparison Type	Each output is set when the present value of the counter matches with the compare value (which is transferred from the PC), and is switched OFF by a reset command from the PC. YH : Direct output processed by hardware. YS : Software processed output with worst delay time of 300µs. (Therefore, when the input frequency is 50 kHz, there is a worst case delay of 15 input pulses.)
Output signal	Types of outputs	YHN : NPN transistor output for YH output YHP : PNP transistor output for YH output YSN : NPN transistor output for YH output YSP : PNP transistor output for YH output 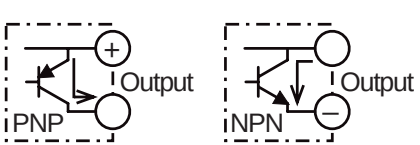
	Output capacity	DC 12V to 24V 0.5A
I/O occupation		8 point taken from the FX, FX2C expansion bus (can be either inputs or outputs)
Power from base		DC 5V 70mA

3.3 Buffer memories (BFM)

BFM number		Contents	
Write	#0	Counter mode K0 to K11	Default: K0
	#1	DOWN/UP command (1-phase 1-input mode)	Default: K0
	#3, #2	Ring length Upper/Lower	Default: K65,536
	#4	Command	Default: K0
	#11, #10	Preset data Upper/Lower	Default: K0
	#13, #12	YH compare value Upper/Lower	Default: K32,767
	#15, #14	YS compare value Upper/Lower	Default: K32,767
Write / Read	#21, #20	Counter current value Upper/Lower	Default: K0
	#23, #22	Maximum count value Upper/Lower	Default: K0
	#25, #24	Minimum count value Upper/Lower	Default: K0
Read	#26	Compare results	
	#27	Terminal status	
	#29	Error status	
	#30	Model identification code K4010	

#5~#9, #16~19, #28, #31 are reserved.

(1) BFM #0 Counter mode (K0 to K11), BFM #1 DOWN/UP command

Count modes		32 bits	16 bits
2-phase input (phase difference pulse)	1 edge count	K0	K1
	2 edge count	K2	K3
	4 edge count	K4	K5
1-phase 2-input (add/subtract pulse)		K6	K7
1-phase 1-input	Hardware UP/DOWN	K8	K9
	Software UP/DOWN	K10	K11

The counter mode is selected form the PC. As shown below, values between K0 and K11 are written to buffer memory BFM #0 form the PC. When a value is written to BFM #0 the contents of BFM #1 to BFM #31 are reset to default values. When setting this value use a TOP (pulsed) instruction use M8002 (initial pulse) to drive the TO instruction.
A continuous command is not allowed.

(a) 32-bit counter modes

A 32-bit binary counter which executes UP/DOWN counting will change from the lower limit to the upper limit or the upper limit to the lower limit when overflow occurs. Both the upper and lower limits are fixed values: the upper limit is +2,147,483,647, and the lower limit is -2,147,483,648.

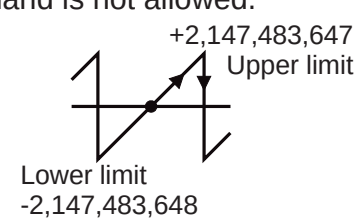

(b) 16-bit counter modes

A 16-bit binary counter handles only positive values from 0 to 65,535. Changes to zero from the upper limit or to the upper limit from zero when overflow occurs; the upper limit is determined by BFMs #3 and #2.

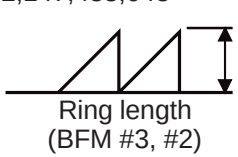

(c) 1-phase 1-input counter (K8 to K11)

- Hardware UP/DOWN (K8, K9)

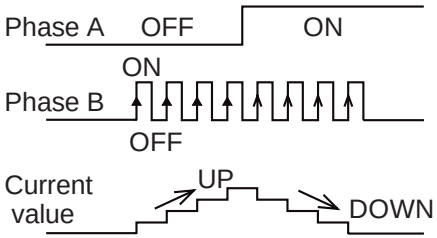

UP/DOWN is determined by input phase A (ON/OFF).

- Software UP/DOWN (K10, K11)

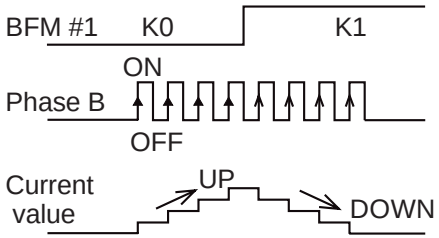

UP/DOWN is determined by the contents of BFM #1, (K0/K1).

(d) 1-phase 2-input counter (K6, K7)

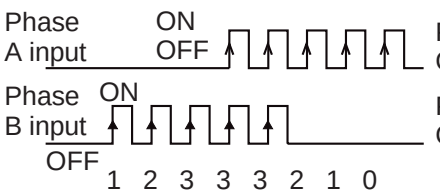

Phase A input -1 at OFF→ON.

Phase B input+1 at OFF→ON.

If both phase A and phase B inputs are received simultaneously, the counter value dose not change.

(e) 2-phase counter (K0 to K5)

- 1 edge-count-counter (K0, K1)

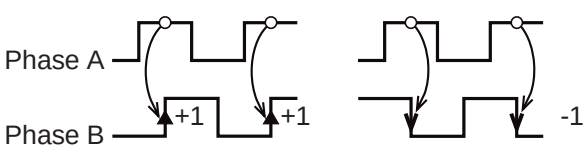

Phase B inputOFF →ON while phase A input ON Count up by 1.

Phase B input ON →OFF while phase A input ON Count down by 1.

- 2 edge-count counter (K2, K3)

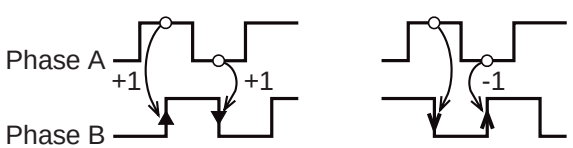

Phase B input OFF →ON while phase A input ON Count up by 1.

Phase B input ON →OFF while phase A input ON Count down by 1.

- 4 edge-count counter (K4, K5)

UP COUNT :

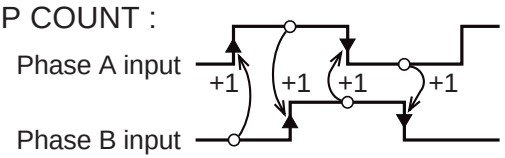

DOWN COUNT :

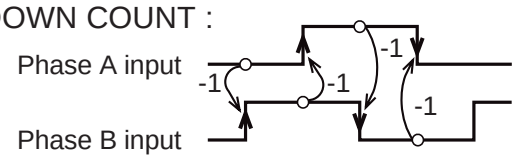

(2) BFM #3, #2 Ring length

Stores the data that specifies the length of the 16-bit counter (default: K65,536).

```
X002
 ─┤ ├──[(D) TO   K2    K2    K100    K1  ]
```

In the above example, K100 is written into BFMs #3 and #2 of special block No.2 as a 32-bit binary value (BFM #3 = 0, BFM #2 = 100). Permitted values: K2 to K65,536.

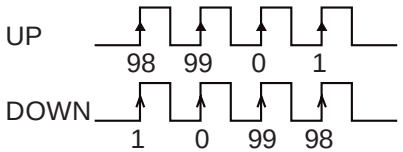

When ring length K100 is specified, the value of the counter changes as shown above.

Write counter data with(D)TO

- Count data is always handled as a pair from two 16-bit values in this special function block. 16-bit 2's complement value stored in the registers of the PC cannot be used.
- When you are writing a positive value between K32,768 and K65,535, the data should be treated as a 32-bit value even when a 16-bit ring counter is used.
- When transferring counter data to/from this special function block, always use the 32-bit forms of the FROM/TO instructions ((D) FROM, (D) TO).

(3) BFM #4 Command

BFM #4	When '0' (OFF)	When '1' (ON)
b0	Count prohibit	Count permit
b1	YH output prohibit	YH output permit
b2	YS output prohibit	YS output permit
b3	YH/YS independent action	Mutual reset action
b4	Preset prohibit	Preset permit
b5 to b7	Undefined	
b8	No action	Error flag reset
b9	No action	YH output reset
b10	No action	YS output reset
b11	No action	YH output set
b12	No action	YS output set

1. When b0 is set to ON and the DISABLE input terminal to OFF, the counter is permitted to start counting input pulses.
2. Unless b1 is set to ON, YH (hardware compared output) dose not turn ON.
3. Unless b2 is set to ON, YS (software compared output) dose not turn ON.
4. When b3 = ON, YS output is reset if YH output is set, and YH output is reset if YS output is set. When b3 = OFF, YH and YS output act independently, and do not reset each other.
5. When b4 = OFF, preset function by the PRESET input terminal is disabled.
6. When b8 is set to ON, all error flags are reset.
7. When b9 is set to ON, YH output is reset.
8. When b10 is set to ON, YS output is reset.
9. When b11 is set to ON, YH output is set ON.
10. When b12 is set to ON, YS output is set ON.

(4) BFM #11, #10 Preset data

- Data to used as the initial value when the counter starts to count.
- Data becomes valid when b4 of BFM #4 is set to ON, and PRESET input terminal changes from OFF to ON. The default value of the counter is zero. You can change it by writing a value into BFM #11 and #10 or by using the command below.
- The initial counter value can also be set by writing the data directly into BFM #21 and #20 (current value of the counter).

(5) BFM #13, #12 Comparison value for YH output, BFM #15, #14 Comparison value for YS output

- After comparing the current value of the counter with the value written in BFM #13 and #12, BFM #15 and #14, the hardware and software comparator in the FX-1HC outputs the comparison result.
- YH, YS output will not turn ON if you use PRESET or the TO instruction to set the counter value equal to the comparison value. It will turn ON only when a match occurs by the counting of input pulses.
- The YS comparison operation takes about 300µs, and if a match occurs, the output goes ON.
- Output occurs when the current value becomes equal to the compare value but only if b1 and b2 of BFM #4 are ON. Once an output is set, it remains ON until it is reset by b9 or b10 of BFM #4. If b3 of BFM #4 is ON, however, one of the outputs is reset when the other is set.

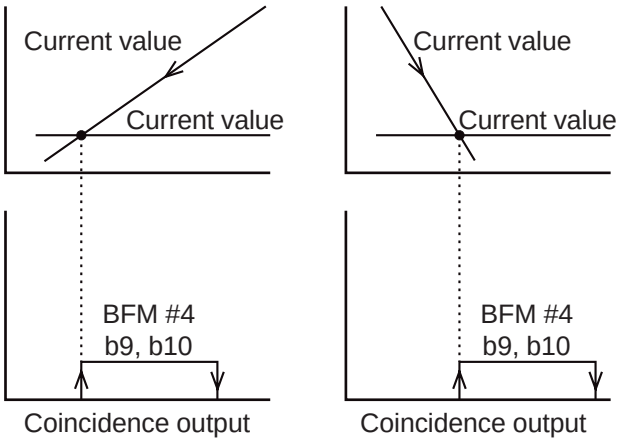

(6) Counter current value (BFM #21, 20)

The current value of the counter can be read by the PC. It will not be the correct value during high-speed operations because of the communication delay. The current value of the counter can be forcibly changed by writing a 32-bit value into the appropriate BFMs from the PC.

(7) Maximum count value (BFM #23, 22)

These store the maximum and minimum value reached by the counter. If the power is turned off, the stored data is cleared.

(8) Comparison status (BFM #26)

BFM #26		When '0' (OFF)	When '1' (ON)
YH	b0	Set value ≤ current value	Set value > current value
	b1	Set value ≠ current value	Set value = current value
	b2	Set value ≥ current value	Set value < current value

BFM #26		When '0' (OFF)	When '1' (ON)
YS	b3	Set value ≤ current value	Set value > current value
	b4	Set value ≠ current value	Set value = current value
	b5	Set value ≥ current value	Set value < current value

BFM #26 is for reading only. Write commands from the programmable controller are ignored.

(9) Terminal status (BFM #27)

BFM #27	When '0' (OFF)	When '1' (ON)
b0	PRESET input is OFF.	PRESET input is ON.
b1	DISABLE input is OFF.	DISABLE input is ON.

BFM #27	When '0' (OFF)	When '1' (ON)
b2	YH output is OFF.	YH output is ON.
b3	YS output is OFF.	YS output is ON.
b4 to b15	Undefined	

(10) BFM #29 Error status

Error status in the FX-1HC can be checked by reading the contents of b0 to b7 of BFM #29 to auxiliary relays of the PC.

BFM #29	Error status	
b0	Set when any of b1 to b7 is ON.	
b1	Set when the value of the ring length is written incorrectly (other than K2 to K65,536).	
b2	Set when the preset value is written incorrectly.	When value ≥ ring length in 16-bit counter mode.
b3	Set when the compare value is written incorrectly.	
b4	Set when the current value is written incorrectly.	
b5	Set when the counter overflows the upper limit.	When the upper or lower limit is exceeded on a 32-bit counter.
b6	Set when the counter overflows the lower limit.	
b7	Set when the FROM/TO command is used incorrectly.	
b8 ~ b15	Undefined	

There error flags can be reset by b8 of BFM #4.

(11) Model identification code number BFM #30

The identification number for a Special Function Block is read by using the FROM command.

The identification number for the FX-1HC unit is K4010.

By reading this identification number, the user may create built-in checking routines to check whether the physical position of the FX-1HC matches to that of the software.

4 EXAMPLE PROGRAM

Please use the following program as a guide whenever you use the FX-1HC unit. Other instructions to read the current value of the counter, status etc. can be added as required.

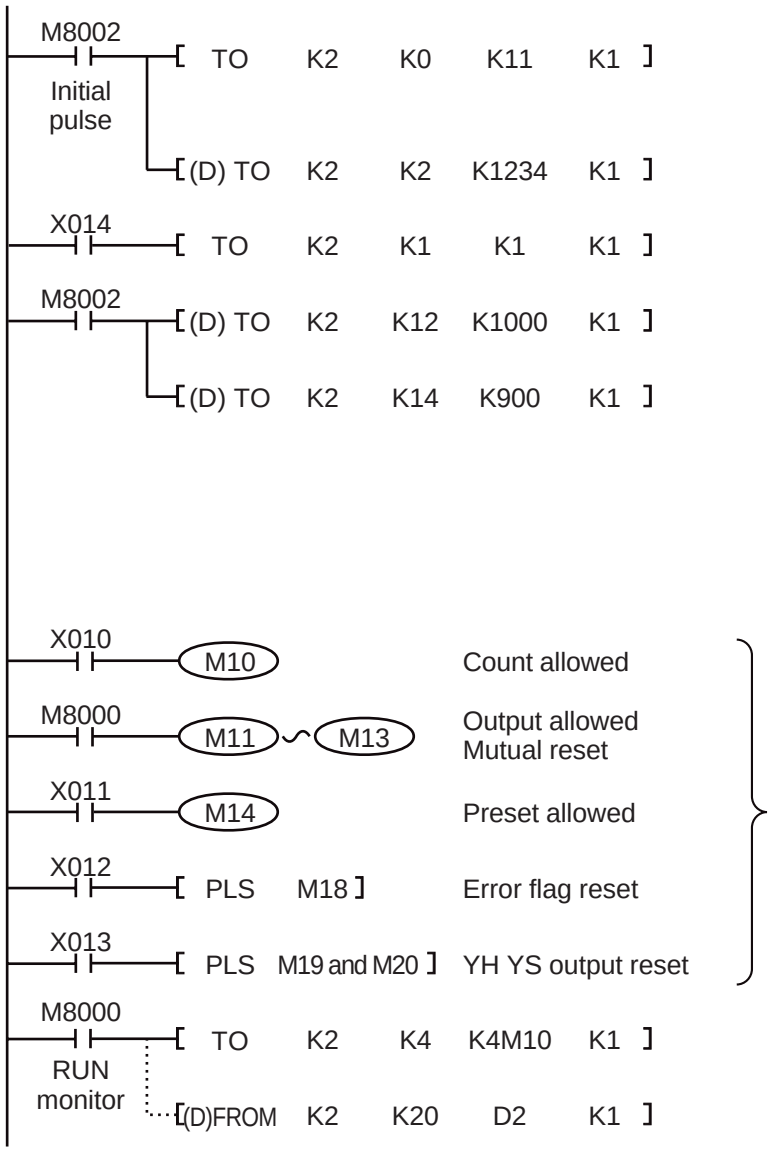

1. K11 is written into BFM #0 of special function block No.2. The counter input is 16-bit 1-phase. Please use a pulse command for this initialization.
2. K1234 → BFM #3, #2 (special function block No.2) The ring length can be specified when a 16-bit counter is specified.
3. UP/DOWN direction should be specified for 1-phase 1-input software determined UP/DOWN counter.
4. K1000 → BFM #13, #12 Set the compare value for YH output.
5. K900 → BFM #15, #14 Set the compare value for YS output (not necessary if only YH output is used).
6. Note that counting only occurs if count prohibit is OFF. Also, outputs will not be set from the counting process at all if the relevant output prohibit are set in the command register. Please reset the error flags and YH/YS output before you start. The mutual reset and preset initialization commands can be used as required.
7. (M25 to M10) → BFM #4 (b15 to b0) command
8. BFM (#21, #20) → Reads the current value to the data registers D3 and D2.

5 DAIGNOSTICS

5.1 Preliminary checks

(1) Check that the I/O wiring and extension cable of the FX-1HC are properly connected.
(2) 5V 70mA power is supplied from the base or extension units for the FX-1HC. Check that there is no power overload from this and other extension blocks.
(3) The counter works correctly only when data such as the counter mode (set with a pulse command), the TO command, the compare value, etc. are appropriately specified. Remember to initialize the count (BFM #4 b0), preset (BFM #4 b4), and output (BFM #4 b2, b1) prohibits. Reset the YH/YS outputs before you start.

5.2 Error checking

The following LEDs on the main panel of the FX-1HC may help you to troubleshoot the unit.

- ϕA, ϕB : Goes on/off as ϕA, ϕB input turn ON/OFF. It can be checked by rotating the encoder slowly.
- UP, DN : Lights up to indicate whether the counter is going up (UP) or down (DN).
- PRESET and DIS : The appropriate LED lights up when the PRESET terminal or the DISABLE terminal is ON.
- YH, YS : The appropriate LED lights up when YH/YS output is turned on.

You can check the error status by reading the content of BFM #29 to the PC. Error contents are shown in section 3.3 (10).

6 SYSTEM BLOCK DIAGRAM

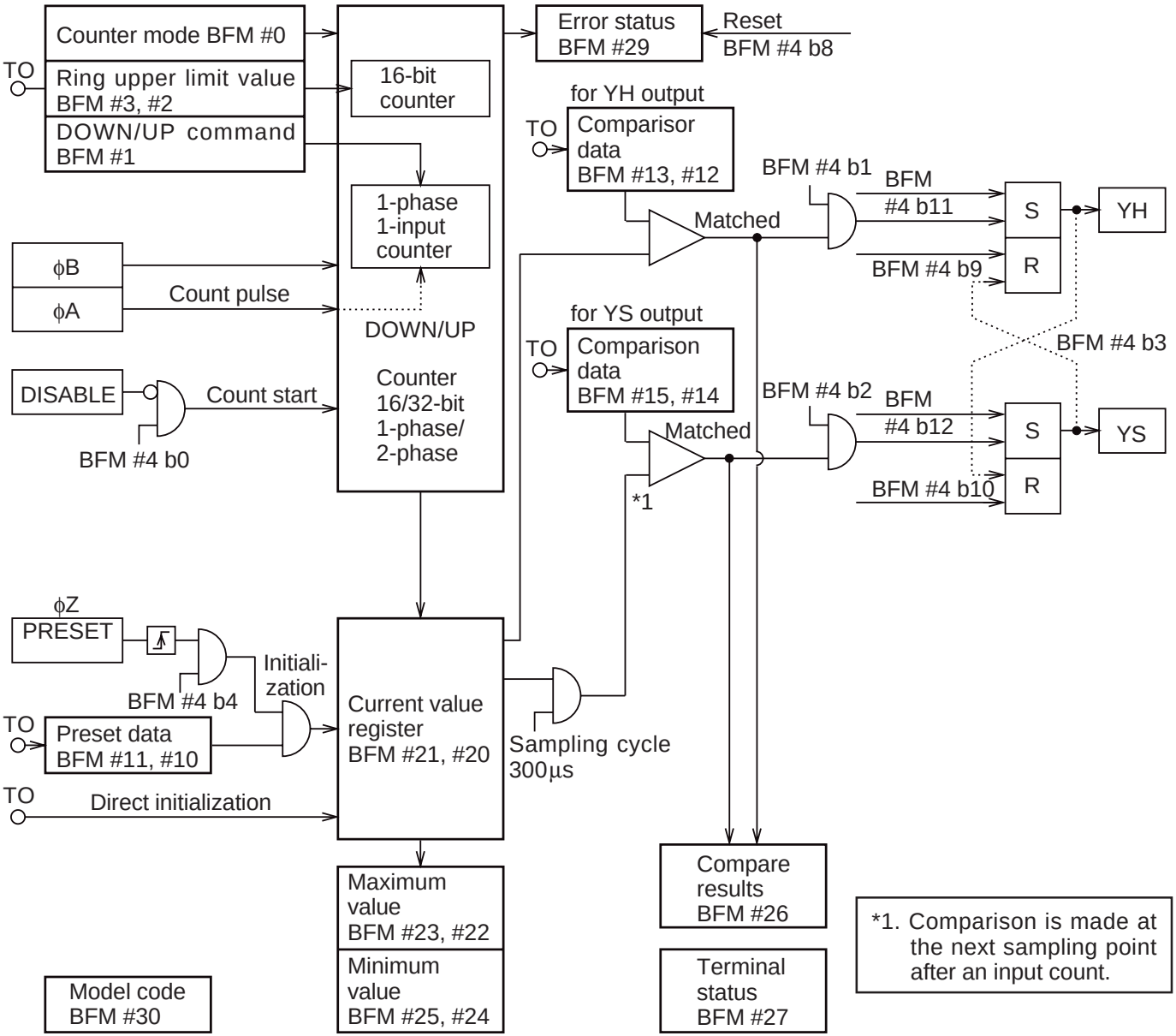

*1. Comparison is made at the next sampling point after an input count.

Guidelines for the safety of the user and protection of the FX-1HC special function block

- This manual has been written to be used by trained and competent personnel. This is defined by the European directives for machinery, low voltage and EMC.
- If in doubt at any stage during the installation of the FX-1HC always consult a professional electrical engineer who is qualified and trained to the local and national standards. If in doubt about the operation or use of the FX-1HC please consult the nearest Mitsubishi Electric distributor.
- Under no circumstances will Mitsubishi Electric be liable or responsible for any consequential damage that may arise as a result of the installation or use of this equipment.
- All examples and diagrams shown in this manual are intended only as an aid to understanding the text, not to guarantee operation. Mitsubishi Electric will accept no responsibility for actual use of the product based on these illustrative examples.

Manual number : JY992D53001
Manual revision : A
Data : Febrary 1996

MITSUBISHI ELECTRIC CORPORATION
HEAD OFFICE : MITSUBISHI DENKI BLDG MARUNOUCH TOKYO 100 TELEX : J24532 CABLE MELCO TOKYO
HIMEJI WORKS : 840, CHIYODA CHO, HIMEJI, JAPAN

Effective FEB. 1996
Specifications are subject to change without notice.

JY992D53001A